PRODUCT SUBMITTAL

1004X Type III X Screw On Veneer Anchor Seismic

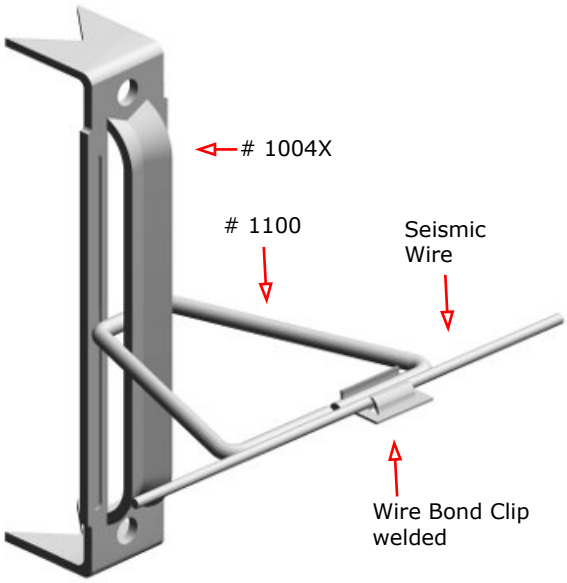

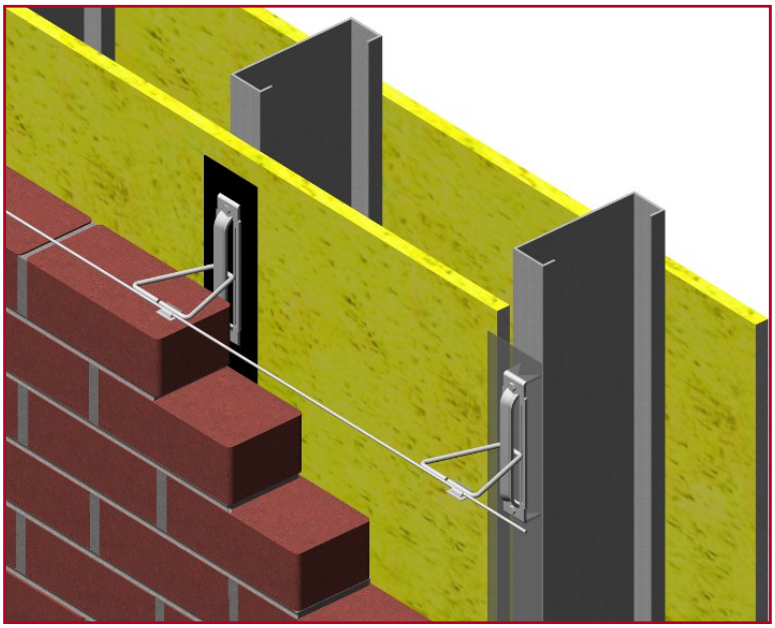

MATERIAL CONFORMANCE	SIZES / FINISHES
SHEET METAL - (Carbon Steel) **ASTM A1008 / A1008M** Mill Galvanized / Zinc Coating: **ASTM A641 / A641M (0.10 0z per sq ft)** Hot Dip Galvanized after fabrication / Zinc Coating **ASTM A153 / A153M-B2 (1.50 oz per sq ft)** Stainless Steel **ASTM 580 / ASTM 580M Type 304** (Type 316 available on special order) **ASTM A82 / A82M** - (Cold drawn steel wire) Tensile Strength - 80,000 psi Yield Point - 70,000 psi **ACI / ASCE 530** - (Building code requirements for masonry structures) **Steel Products (flats):** Mill Galvanized & Hot Dip, 59.2% Post-Consumer 8.8% Post Industrial / Pre - Consumer Stainless Steel, 60% Post Consumer V O C Content - 0% **WIRE Recycled Content:** Mill Galvanized & Hot Dip, 85% Post-Consumer 13% Post Industrial / Pre - Consumer Stainless Steel, 60% Post Consumer V O C Content - 0%	**# 1004 Type III X:** 1-1/4" wide x 6" long ☐ 14 gauge ☐ 12 gauge **For Gypsum Sheathing:** ☐ 5/8" ☐ 1/2" **# 1100 Triangle:** ☐ 3/16" diameter ☐ 1/4" diameter ☐ 3"x3" ☐ 4"x4" ☐ 5"x5" ☐ 6"x6" ☐ 7"x7" ☐ 7" x 9" **Straight & Cut Seismic Wire** ☐ 9 gauge ☐ 3/16" **FINISH:** ☐ Mill Galvanized ☐ Hot Dip Galvanized ☐ Stainless Steel

Corporate Office: 400 Rountree Rd Charlotte, NC 28217
TEL: (800) 849-6722 FAX: (704) 525-3761

Mailing Address: P.O. Box 240988 Charlotte, NC 28224

Memphis Plant: 2365 Harbor Ave. Memphis, TN 38113
TEL: (800) 441-8359 FAX: (901) 775-9449

Mailing Address: P.O. Box 13124 Memphis, TN 38113

www.wirebond.com